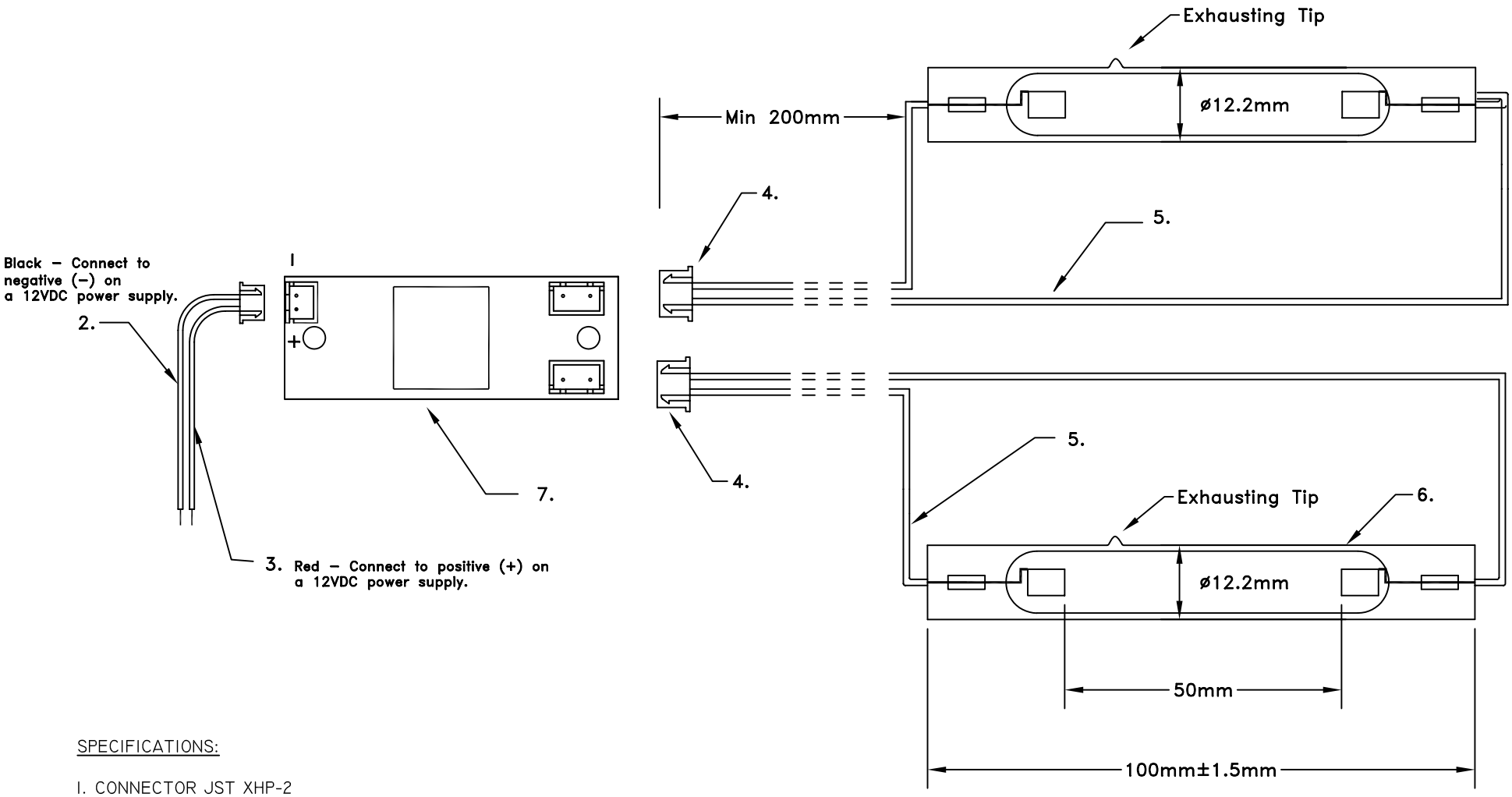

SPECIFICATIONS:

1. CONNECTOR JST XHP-2
2. BLACK INSULATED WIRE, MIN. 150MM LENGTH AND STRIPPED
3. RED INSULATED WIRE, MIN. 150MM LENGTH AND STRIPPED
4. CONNECTOR JST XHP-3
5. HIGH VOLTAGE INSULATED WIRE, RED/BLACK OR WHITE, MIN. 200MM LENGTH
6. TWO (2) COLD CATHODE FLUORESCENT LAMP
   - 100MM LENGTH
   - OD=12.2MM
   - UV OUTPUT MAX 5.0 MW/CM^2 AT QUARTZ LEVEL
   - STARTING VOLTAGE 300V, MAINTAINING VOLTAGE 200V
   - OPERATING CURRENT: 5MA
   - STABILIZATION TIME: 3 MINUTES
7. 12VDC DUAL INVERTER

CAUTION: DO NOT POWER THE INVERTER UNTIL YOU CHECK POLARITY!

Rexim LLC	
SCALE: none	DRAWN BY: VS
DATE: 3/23/2020	APPROVED BY: RS
MCC–UV254–100x12 Dual Lamp Inverter Kit	
DIMENSIONS: mm	RX–112012B